HEIDENHAIN

Product Information

EXE 100 Series

Interpolation and
Digitizing Electronics

April 2007

EXE 100 Series

Interpolation and digitizing electronics
- **Input signals ∿ 11 µA$_{PP}$**
- **Output signals ⊓⊔ TTL**

Tolerancing ISO 8015
ISO 2768 - m H
< 6 mm: ±0.2 mm

*) Two mounting screws
M4 x 16 ISO 4762/DIN 912

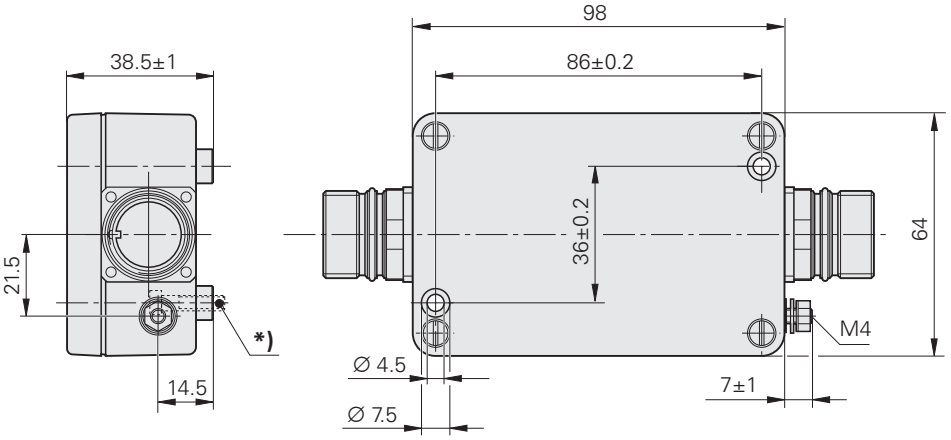

Accessories:
An adapter plate is available for mounting on existing holes for the IBV 6xx/EXE 6xx:

Adapter plate: ID 536452-01

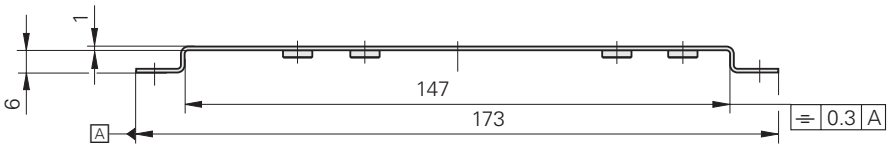

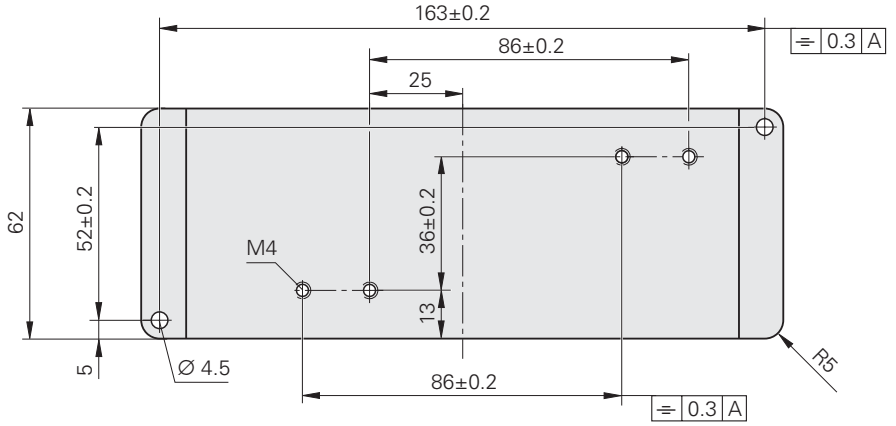

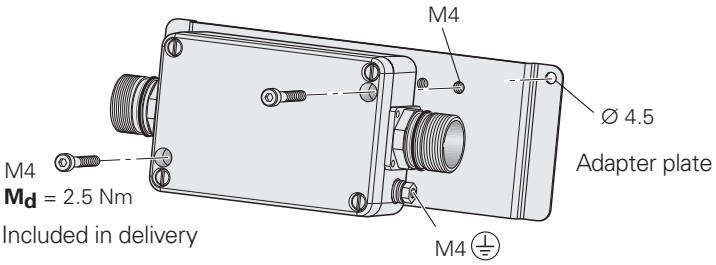

Specifications	EXE 101 EXE 102						
Input	∿ 11 μA_{PP}						
Electrical connection	M23 flange socket (female) 9-pin						
Cable length	≤ 30 m for $I_{Encoder}$ ≤ 120 mA						
Interpolation[1]	**5-fold,** 10-fold, 20-fold, 25-fold, 50-fold, 100-fold						
Input frequency[1] for interpolation	Nominal values[2]						
EXE 101 *5-fold*	100 kHz	100 kHz	100 kHz	100 kHz	80 kHz	50 kHz	25 kHz
10-fold	100 kHz	**100 kHz**	66 kHz	50 kHz	40 kHz	**25 kHz**	12.5 kHz
EXE 102 *20-fold*	60 kHz	50 kHz	33 kHz	25 kHz	20 kHz	12.5 kHz	6.25 kHz
25-fold	60 kHz	40 kHz	26 kHz	20 kHz	16 kHz	**10 kHz**	5 kHz
50-fold	40 kHz	20 kHz	13 kHz	10 kHz	8 kHz	**5 kHz**	2.5 kHz
100-fold	20 kHz	10 kHz	6.6 kHz	5 kHz	4 kHz	2.5 kHz	1.25 kHz
Output	⊓⊔ TTL (clocked)						
Electrical connection	M23 flange socket (male) 12-pin						
Cable length	≤ 100 m ($\overline{U_{aS}}$ ≤ 50 m)						
Edge separation *a*	≥ 0.100 µs	≥ 0.220 µs	≥ 0.345 µs	≥ 0.465 µs	≥ 0.585 µs	≥ 0.950 µs	≥ 1.925 µs
Reference mark signal[1]	Pulse width **90° elec.** or 270° elec.						
Fault indication[1]	Through **fault detection signal** $\overline{\mathbf{U_{aS}}}$ or, in addition, U_{a1}/U_{a2} high impedance						
Power supply	5 V ± 5%						
Current consumption[3]	*EXE 101:* ≤ 120 mA *EXE 102:* ≤ 140 mA						
Operating temperature **Storage temperature**	0 °C to 70 °C –30 °C to 80 °C						
Vibration 50 to 2000 Hz **Shock** 11 ms	≤ 100 m/s^2 ≤ 300 m/s^2						
Degree of protection	IP 65						
Weight	Approx. 0.3 kg						

Bold: These preferred versions are available on short notice, please select when ordering
[1] Adjustable
[2] The actual input frequency can be up to 5% lower. Exceeding this limit results in failure
[3] Not including output load (80 mA with recommended input circuitry) or the current consumption of the encoder (see the corresponding brochure)

Electrical Connection

Connecting cable or adapter cable with M23 connector (male), 9-pin **Cable** and **connector,** 9-pin See HEIDENHAIN catalogs for digital readout and length gauges as well as product Information sheets for the respective encoders			**M23 connecting cable** 12-pin, Ø 8 mm
			Complete ID 298399-xx
			With one connector ID 309777-xx
			Cable only [4(2x0.14mm^2) + (4x0.5 mm^2)] ID 244957-01
			Connector (female) 12-pin ID 291697-05

EXE input – ∿ 11 µA$_{PP}$

9-pin
M23 flange socket

	Power supply				Incremental signals					
	3	**4**	**Chassis**	**9**	**1**	**2**	**5**	**6**	**7**	**8**
	U_P	**0 V**	**External shield**	**Internal shield**	**I_1+**	**I_1–**	**I_2+**	**I_2–**	**I_0+**	**I_0–**
	Brown	White	–	White/ Brown	Green	Yellow	Blue	Red	Gray	Pink

U_P = power supply voltage
Vacant pins or wires must not be used!

Shield on housing
Color assignment applies only to extension cable.

EXE output – ⊓⊔ TTL

12-pin
M23 flange socket

12-pin
M23 connector

	Power supply				Incremental signals						Other signals	
	12	**2**	**10**	**11**	**5**	**6**	**8**	**1**	**3**	**4**	**7**	**9**
	U_P	**Sensor** 5 V	**0 V**	**Sensor** 0 V	**U_{a1}**	**$\overline{U_{a1}}$**	**U_{a2}**	**$\overline{U_{a2}}$**	**U_{a0}**	**$\overline{U_{a0}}$**	**$\overline{U_{aS}}$**	**PWT-Testpin**
	Brown/ Green	Blue	White/ Green	White	Brown	Green	Gray	Pink	Red	Black	Violet	Yellow

Shield on housing; **U_P** = power supply voltage
Sensor: The sensor line is connected internally with the corresponding power line

HEIDENHAIN

DR. JOHANNES HEIDENHAIN GmbH
Dr.-Johannes-Heidenhain-Straße 5
83301 Traunreut, Germany
☏ +49 (8669) 31-0
FAX +49 (8669) 5061
E-Mail: info@heidenhain.de

www.heidenhain.de

For more information
- Product overview: *Interface Electronics*

624 602-21 · 10· 4/2007 · F&W · Printed in Germany · Subject to change without notice